MINI EXCAVATORS

15ZT | 15ZT Plus
18ZT | 19ZT | 19TR

EUROCOMACH

Concrete solutions. Always.

PEDAL CONTROL
FOR BOOM SWING AND HAMMER (AUX 1)

	15ZT	18ZT
BOOM	Monoboom	Monoboom
UNDERCARRIAGE	Min - max undercarriage width 990 - 1,250 (mm)	Min - max undercarriage width 990 - 1,300 (mm)
ENGINE	Diesel engine Yanmar 854 cc [11.3 KW 15.4 HP]	
CONTROLS	Servocontrolled joysticks and pedals for boom swing and hammer circuit AUX 1	
APPLICATIONS	For excavation work, with breaker, auger and tilt bucket	

PROPORTIONAL ROLLER CONTROLS
FOR BOOM SWING AND AUX 1

15ZT Plus	**19ZT**	**19TR**
Monoboom	Monoboom	Two-piece boom
Min - max undercarriage width 990 - 1,250 (mm)	Min - max undercarriage width 990- 1,300 (mm)	Min - max undercarriage width 990 - 1,300 (mm)
Diesel engine Yanmar 854 cc [11.3 KW 15.4 HP]	**LARGER DISPLACEMENT** **Diesel engine 1116 cc** [13.7 KW 18.6 HP]	
Electroproportional rollers on joysticks for boom swing and hammer circuit AUX 1		Electroproportional rollers on joysticks for boom swing, hammer circuit (AUX1) and two-piece boom

For excavation work with tilt-rotator systems,
grapples with rotator and all types of hydraulic attachments

PEDAL CONTROL
FOR BOOM SWING AND HAMMER (AUX 1)

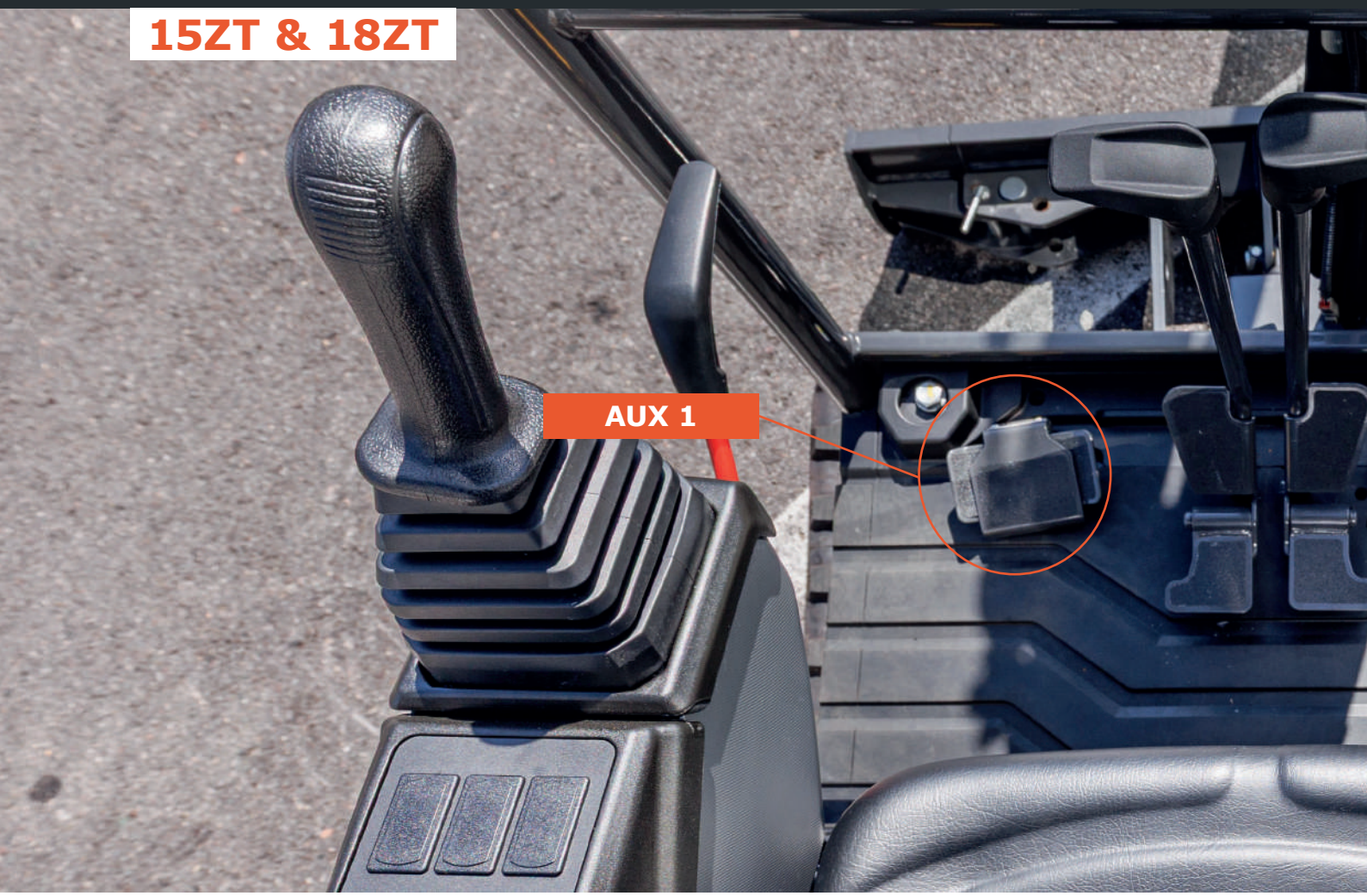

The 15ZT and 18ZT are standard equipped with single/double acting hammer circuit (AUX 1) on the left pedal, while boom swing is controlled by the right pedal. Both models can be fitted with dedicated preparation for various hydraulic attachments.

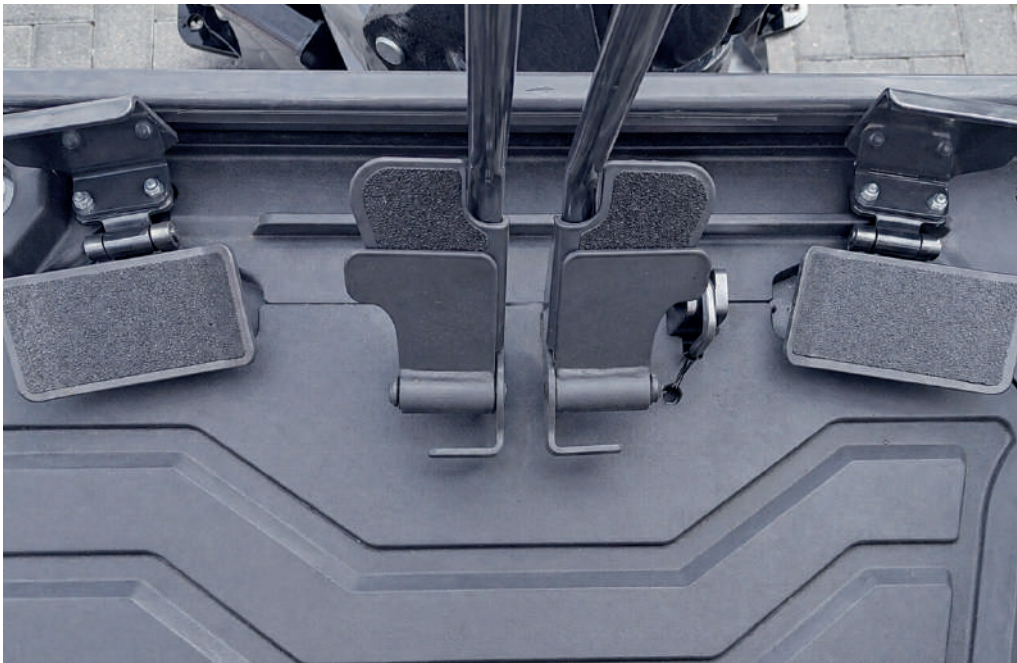

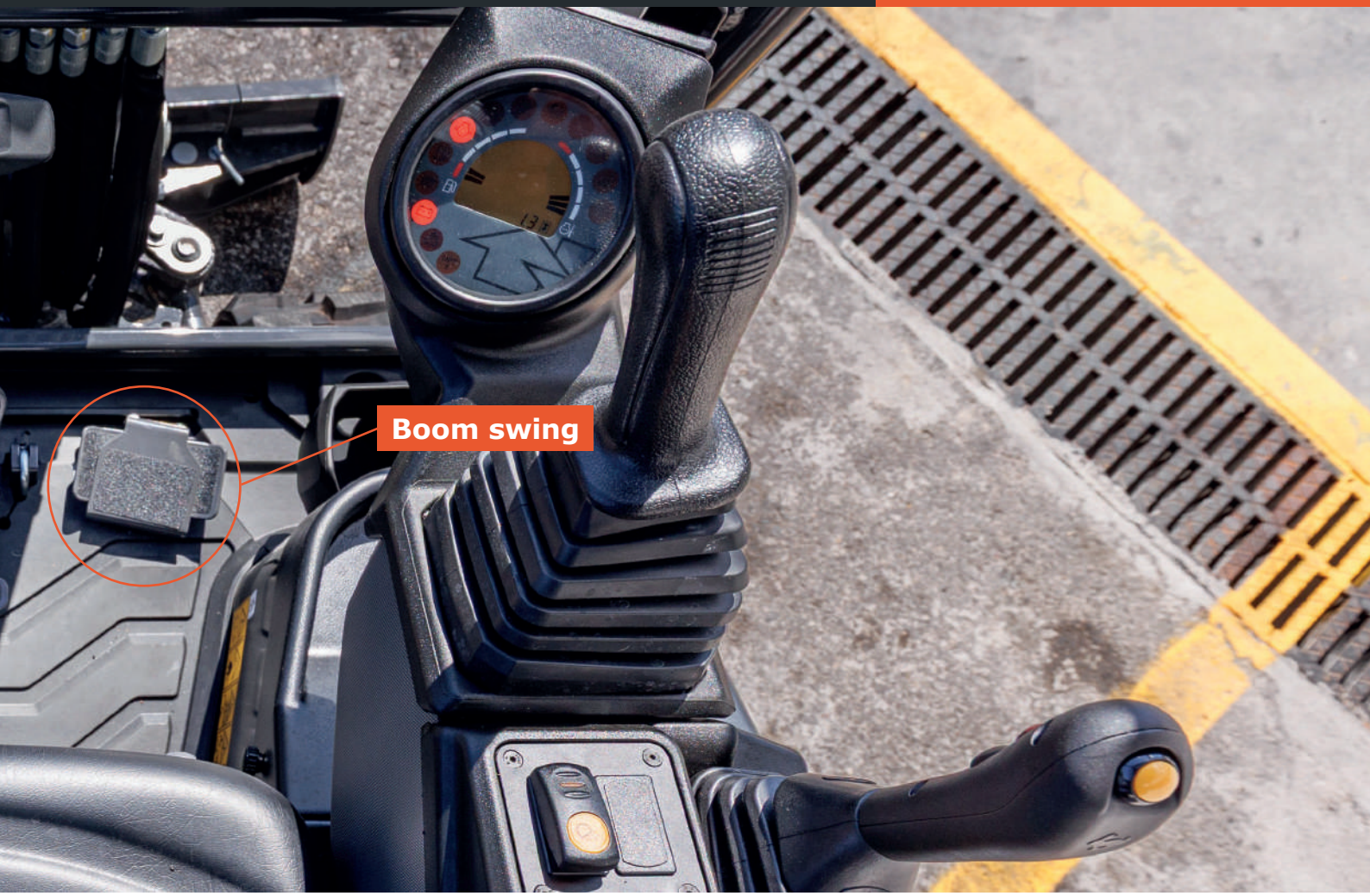
Boom swing

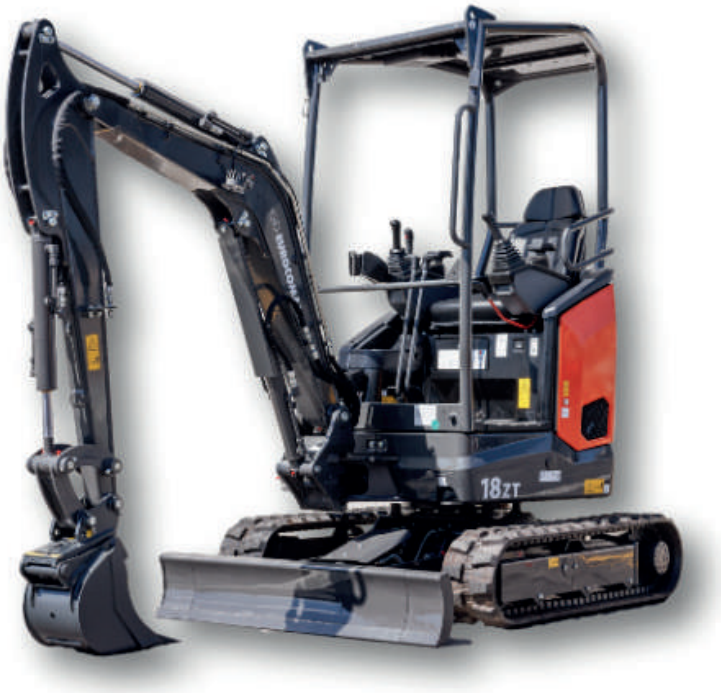
18ZT

PEDAL CONTROL
FOR BOOM SWING AND HAMMER (AUX 1)

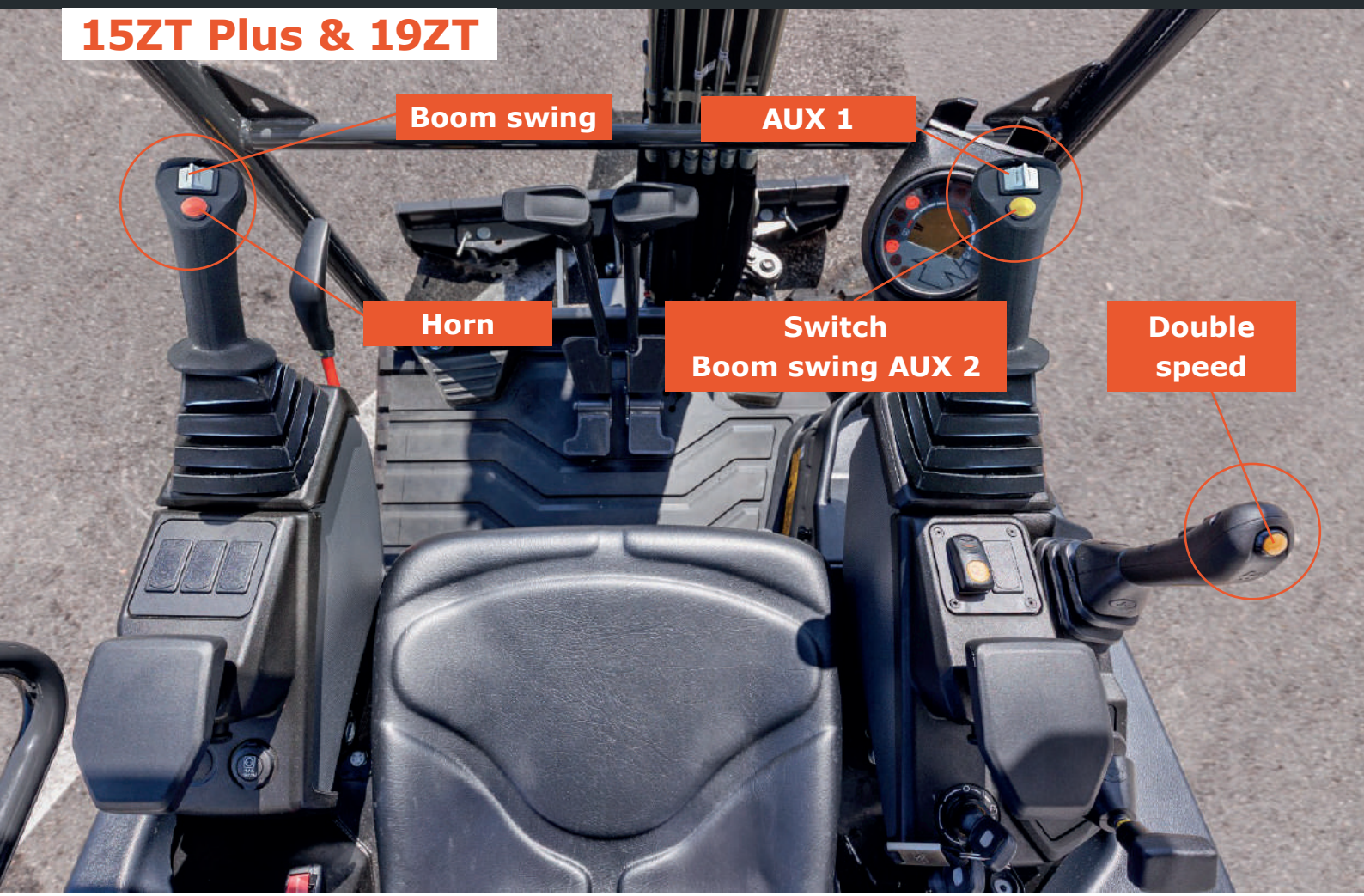

The 15ZTPlus, 19ZT and 19TR models are equipped with proportional rollers integrated into the joysticks (for tilt control and hydraulic functions).

The 15ZTPlus and 19ZT are equipped with:

- AUX 1 via horizontal proportional roller - right joystick
- Boom swing via horizontal proportional roller - left joystick.

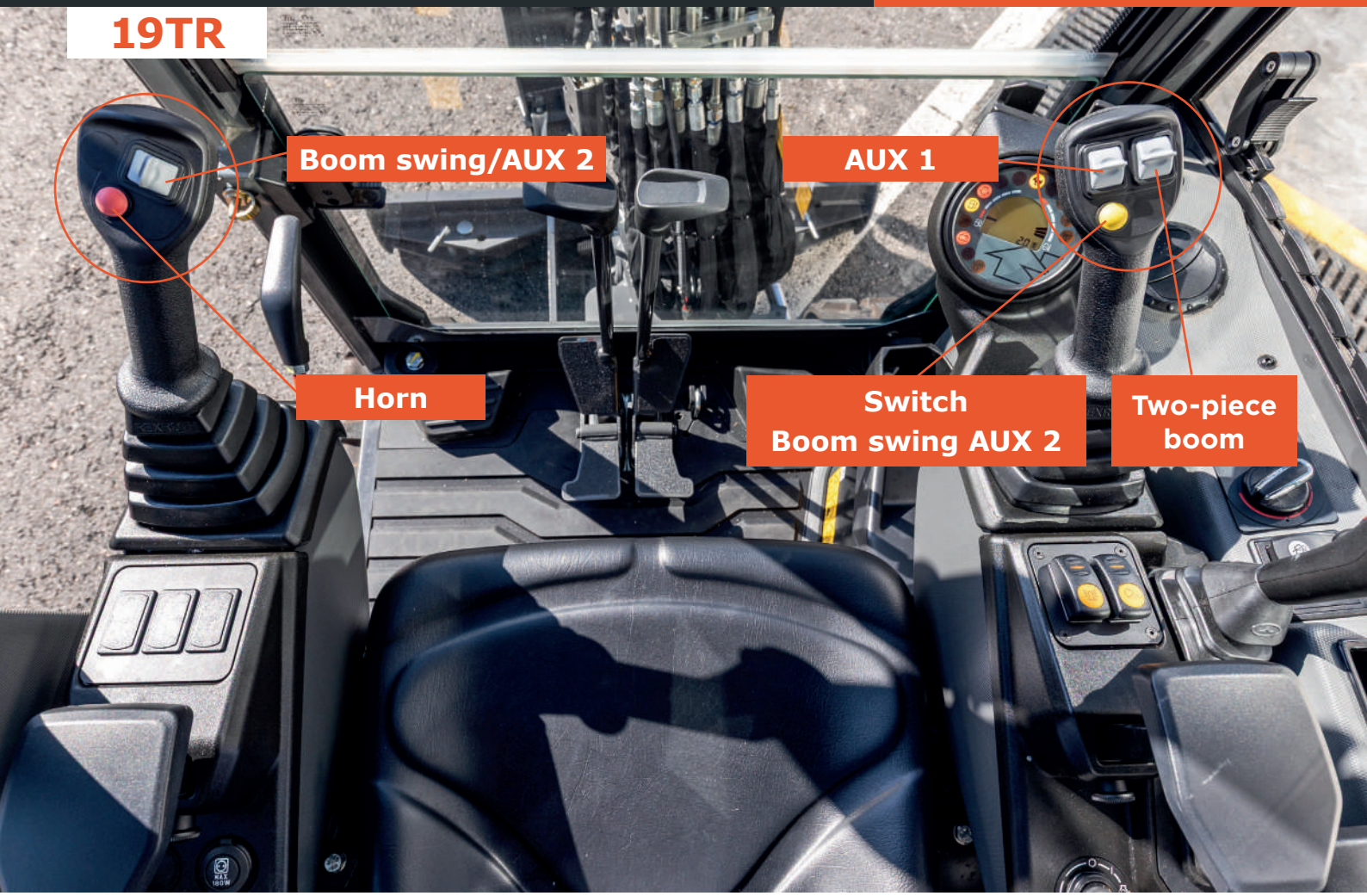

The 19TR model with two-piece boom is equipped as follows:

- Hammer circuit (AUX 1) via left vertical proportional roller on right joystick;
- Boom swing/AUX 2 via horizontal proportional roller on left joystick;
- Two-piece boom via right vertical proportional roller on right joystick.

All models can be equipped with AUX 2 hydraulic circuit (optional), essential for using attachments requiring multiple dedicated hydraulic lines. An additional hydraulic line with mechanical diverters from the bucket cylinder can also be installed.

ATTENTION TO DETAILS

STATE-OF-THE-ART LIGHTING

All models feature LED lights integrated in the main boom as standard. All machines can be equipped with modern and exclusive LED BARS.

For roll-bar version, a kit with 3 LED bars is available (2 front and 1 large rear-integrated LED bar). For cabin version, a kit with 4 LED bars is available (2 front and 2 rear).

A optional LED rotating beacon is also available to ensure maximum visibility.

ON-BOARD COMFORT

Both roll-bar and cabin are platform-mounted and therefore separated from the engine compartment to ensure greater comfort.

Special care has been given to the operator station, now even more ergonomic, spacious and comfortable thanks to attention to details (adjustable armrests, smartphone holder and storage compartments).

THE ADDED VALUE

TRANSPORT SAFETY

All models feature 4 anchoring points/ eyelets integrated into the upper structure; 2 at the front and 2 at the rear. A further 4 additional eyelets are integrated into the undercarriage, ensuring maximum safety during transport. The roll-bar is self-supporting and equipped with two eyelets allowing the machine to be lifted during loading operations.

EXTENDABLE UNDERCARRIAGE

The extendable undercarriage (tracks and blade complete with fold-back wideners) from 990 to 1,300 mm (18ZT, 19ZT and 19TR) or 1,250 mm (15ZT and 15ZT Plus), allows access to narrow spaces while ensuring high stability and safety during operation.

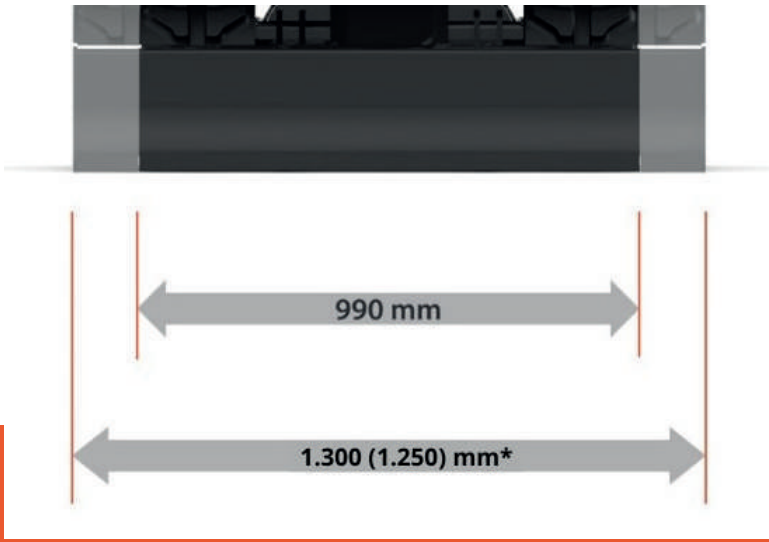

**1,250 mm for 15ZT and 15ZT Plus models, 1,300 mm for 18ZT, 19ZT and 19TR.*

EUROCOMACH

TWO-PIECE BOOM (TR)

- **Superior performance:** the two-piece boom of the 19TR offers lifting capacity comparable to higher-class machines.
- **Maximum compactness and agility:** the two-piece boom reduces overall machine dimensions, allowing freedom of operation even in very tight spaces without compromising performance.
- **Total versatility:** greater digging depth, greater loading height, ability to work closer and farther from the machine center, vertical digging (versatility, one boom more...).

ZERO TAIL SWING (ZT)

ZT models in the Eurocomach range (15ZT, 15ZT Plus, 18ZT and 19ZT) have no rear overhang; the upper structure remains within the track width, ensuring peace of mind for the operator when working in confined spaces or road traffic situations.

EVEN MORE
CABIN COMFORT

The Eurocomach range from 1.5 to 2.0 tonnes offers a working environment designed to guarantee maximum comfort, even during prolonged operations.

INTEGRATED TANK, A NEW SPACE CONCEPT

One of the distinguishing features of many Eurocomach models is that the rear hood also functions as the diesel fuel tank, an ingenious and innovative solution that optimizes the space available on compact machines.

CABIN COMFORT

Despite being zero tail swing, these models can be equipped with a cabin featuring heating, interior lighting, upper glass with sun blind, opening side and front windows.

The platform-mounted cab separated from the engine compartment ensures effective isolation, reducing noise and vibration.

Every detail is designed for practicality: bottle holder, smartphone holder, adjustable armrests, new display, storage compartments, electroproportional controls and foldable pedal levers make the workstation ergonomic and functional. The cabin, equipped with two speakers, is pre-arranged for radio installation with Bluetooth or DAB+ options.

Furthermore, the lower front windscreen can slide up and be fixed to the upper one, with both secured to the roof, allowing full opening of the cabin front.

SIMPLIFIED MAINTENANCE, WITHIN EASY REACH

The Eurocomach 1.5 to 2.0 tonne range is designed to offer superior maintenance comfort thanks to smart solutions that provide easy access to main components. Tilting cabin and canopy allow quick and safe access to the hydraulic system for routine and extraordinary maintenance.

ACCESSIBILITY

The three service hoods ensure optimal accessibility for routine maintenance:

- Rear hood, integrating the diesel tank, provides access to the engine and maintenance points.
- Right hood, 90° wind-opposed opening, provides direct access to radiator and hydraulic tank.
- Left hood, 90° wind-opposed opening, allows direct access to battery and hydraulic pump.

The combination of tilting cabin/ canopy and wide-opening hoods maximizes ease of access for both routine and extraordinary maintenance.

MAINTENANCE SAFETY

When the cabin/roll-bar is lifted, a dedicated safety system is activated, allowing technicians to work comfortably and safely.

The engine is equipped with a safety switch that prevents starting.

EUROCOMACH
15ZT

SPECSHEET
15ZT

Transport weight with canopy
(without bucket and operator) (kg) _____ 1,580
Transport weight with cabin
(without bucket and operator)(kg) _____ 1,690
Operating weight ISO 6016 with canopy
(with bucket 35 kg and operator 75 kg) _____ 1,690
Operating weight ISO 6016 with cabin
(with bucket 35 kg and operator 75 kg) _____ 1,800
Travelling speed
(AUTO TWO SPEED) (km/h) _____1a : 0 ÷ 2.2 / 2a : 0 ÷ 4.1
Slew speed (rpm) _____ 10.5

ENGINE

Type _____YANMAR 3TNV70 - STAGE 5
Max. Power (2.200 rpm) (kW - HP)_____12.0 - 15.4
Displacement (cc) _____854
Number of cylinders_____3
Cooling_____ Liquid
Consumption (lt/h) _____ 2.4
Alternator (V (A))_____12 (40)
Battery (V (Ah))_____12 (65)

HYDRAULIC SYSTEM

Pump type n° _____ variable flow
Pump displacement (cc)_____ 8 + 8 + 6.6
Pump capacity (lt/min) _____ 16 + 16 + 13.1
Max. circuit calibration pressure (bar)_____220
Auxiliary system (max pressure):
AUX 1 single or double effect (lt/min (bar)) _____ 29.1 (205)

PERFORMANCES

Max. digging depth (mm) _____ 2,020
Max, dumping height (mm)_____ 2,340
Bucket breaking force
ISO 6015 (daN) _____ 1,500
Arm breaking force
ISO 6015 (daN) _____ 1,080
Traction force (daN)_____ 1,700
Specific ground pressure (kg/cm²)_____ 0.31
Max. slope _____ 60% - 30°

DIMENSIONS

Maximum width (mm) _____ 990 - 1,250
Total height (mm) _____ 2,370
Rear rotation radius (mm)_____650
Digging arm length (mm) _____950
Tracks width (mm)_____230
Rollers number (for each side) n° _____3

FILLINGS

Fuel tank (lt) _____25
Hydraulic oil tank (lt)_____20
Hydraulic circuit capacity (lt)_____29
Cooling system capacity (lt) _____ 4.5
Engine oil (lt)_____ 2.4

CONTROLS

Boom, dipper stick,
bucket and turret swing_____ 2 pilot joysticks
Track movements
(included counter rotation) _____ 2 mechanical levers
Dozer blade _____pilot lever
Auxiliary system AUX 1 (single or double effect)____ left pedal
Boom swin _____ right pedal

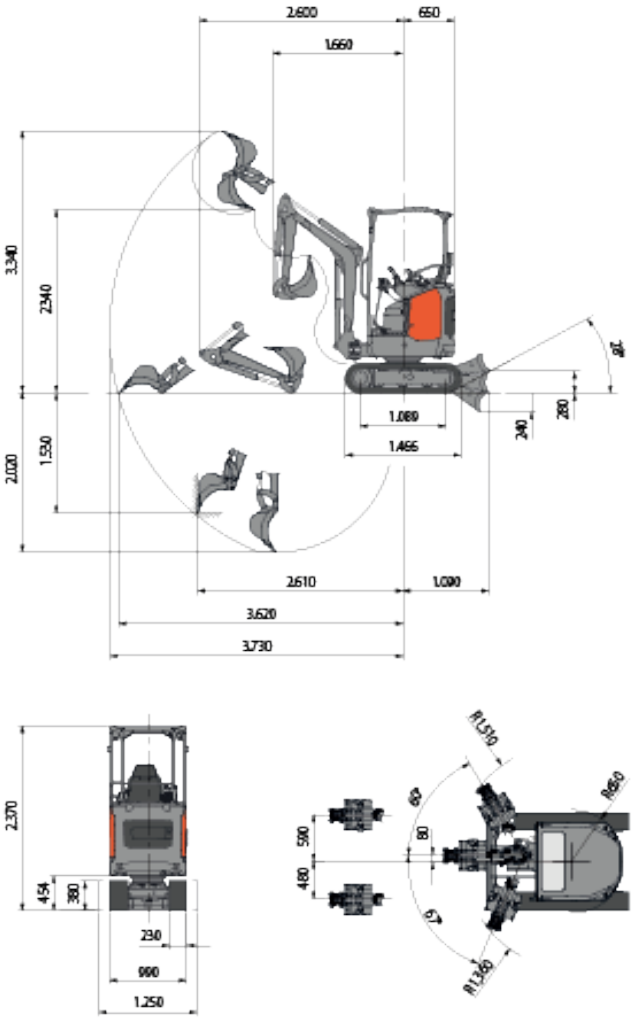

STANDARD & OPTIONAL
15ZT

STANDARD

- YANMAR 854 cc 15.2 HP DIESEL engine - liquid cooled.
- Engine compliant with Stage 5 - Tier 4 Final.
- Hydraulic system open center.
- Hydraulic variable flow pump.
- Tilting cabin (ROPS - FOPS level 1) for maintenance with heating, ventilation, speakers, possibility to install radio and RHS and LHS rear view mirrors OR Tilting canopy (ROPS/TOPS - FOPS level 1) for maintenance.
- Servo assisted hydraulic joysticks.
- Hydraulic flow AUX 1 simple/double effect, max flow 29.1 lt/min and max pressure 205 bar (ex. hammer or auger).
- Hydraulic track widening (990 mm - 1,250 mm).
- Dual travel-speed with "AUTO TWO SPEED".
- Digging arm 950 mm.
- Dozer blade.
- LED working light on arm.
- Operating weight 1,690 kg.
- Minimum width 990 mm / maximum 1,250 mm.
- Digging depth 2,020 mm.
- Maximum height 2,370 mm.
- Breaking force at bucket tooth 1,500 daN.

OPTIONAL

- Preparation for moving loads in accordance with norm EN 474-5, complete with: blocking valves on 1st arm and 2nd arm, overload warning horn, tables of capacities and lifting hook on connecting rod.
- Electric anti-theft device on engine (12 V).
- Radio complete of BLUETOOTH connection with speakerphone, USB socket, SD/SDHC memory card reader, AUX In connection and DAB+ technology (only for cabin version).
- Movement warning horn.
- GEO-service analogue, tracking device for: Locating the machine on the WEB; Checking "real" working hours; Alarm in case of high water temperature or low engine oil pressur; Notification of alarms by SMS, WEB e-mail; 12 month contract.
- Front protection guard for canopy or cabin, certified FRONT-GUARD Level II.
- Front protection in plexiglass for canopy. Not compatible with front cabin protection guard.
- HARDOX wear plate on digging arm.
- Rear view mirrors on right and left sides of the canopy.
- Block valve on the dozer blade cylinder.
- Piloted block valve on cylinders on boom and dipperstick.
- Front plexiglass visor for cabin.
- GEO-service, contract extension of analogue satellite control system 12 months, 24 months, 36 months, 48 months, 60 months.
- LED magnetic beacon light (activation via switch on roll-bar version, only if optional LED bars are installed).
- Extra LED bars on cabin (n°2 in the front and n°2 in the rear) for machine without/equipped with front plexiglass visor (not compatible with front cabin protection guard).
- Extra LED bars on canopy (n°2 in the front and n°1 in the rear) complete with switch and socket on the roof for beacon light.
- PANOLIN biodegradable and ecological lubricants in place of standard version (hydraulic oil, engine oil and lubricating grease. Add for difference).
- PANOLIN HLP SYNTH 46 biodegradable and ecological hydraulic oil in place of standard version (add for difference).
- Colour personalisation with RAL in alternative to Eurocomach orange (the grey colour components cannot be personalised).
- AUX 2 auxiliary hydraulic system with pedal control (max flow 14 lt/min, maximum pressure 210 bar, it works in alternation with boom swing, select using electric switch on left panel).
- Direct drainage to oil tank.
- Hydraulic set-up for grapple rotor with cocks on bucket cylinder.
- Guarantee extension up to 3 years or 2000 hours.

SPECSHEET
15ZT Plus

Transport weight with canopy
(without bucket and operator) (kg) 1,580
Transport weight with cabin
(without bucket and operator)(kg) 1,690
Operating weight ISO 6016 with canopy
(with bucket 35 kg and operator 75 kg) 1,690
Operating weight ISO 6016 with cabin
(with bucket 35 kg and operator 75 kg) 1,800
Travelling speed
(AUTO TWO SPEED) (km/h) 1a : 0 ÷ 2.2 / 2a : 0 ÷ 4.1
Slew speed (rpm) 10.5

ENGINE

Type YANMAR 3TNV70 - STAGE 5
Max. Power (2.200 rpm) (kW - HP) 12.0 - 15.4
Displacement (cc) 854
Number of cylinders 3
Cooling Liquid
Consumption (lt/h) 2.4
Alternator (V (A)) 12 (40)
Battery (V (Ah)) 12 (65)

HYDRAULIC SYSTEM

Pump type n° variable flow
Pump displacement (cc) 8 + 8 + 6.6
Pump capacity (lt/min) 16 + 16 + 13.1
Max. circuit calibration pressure (bar) 220
Auxiliary system (max pressure):
AUX 1 single or double effect (lt/min (bar)) 29.1 (205)

PERFORMANCES

Max. digging depth (mm) 2,020
Max, dumping height (mm) 2,340
Bucket breaking force
ISO 6015 (daN) 1,500
Arm breaking force
ISO 6015 (daN) 1,080
Traction force (daN) 1,700
Specific ground pressure (kg/cm^2) 0,31
Max. slope 60% - 30°

DIMENSIONS

Maximum width (mm) 990 - 1,250
Total height (mm) 2,370
Rear rotation radius (mm) 650
Digging arm length (mm) 950
Tracks width (mm) 230
Rollers number (for each side) n° 3

FILLINGS

Fuel tank (lt) 25
Hydraulic oil tank (lt) 20
Hydraulic circuit capacity (lt) 29
Cooling system capacity (lt) 4.5
Engine oil (lt) 2.4

CONTROLS

Boom, dipper stick,
bucket and turret swing 2 pilot joysticks
Track movements
(included counter rotation) 2 pilot levers
Dozer blade pilot lever
Auxiliary system AUX 1
(single or double effect) electroproportional roller
on right joystick
Boom swing electroproportional roller
on left joystick

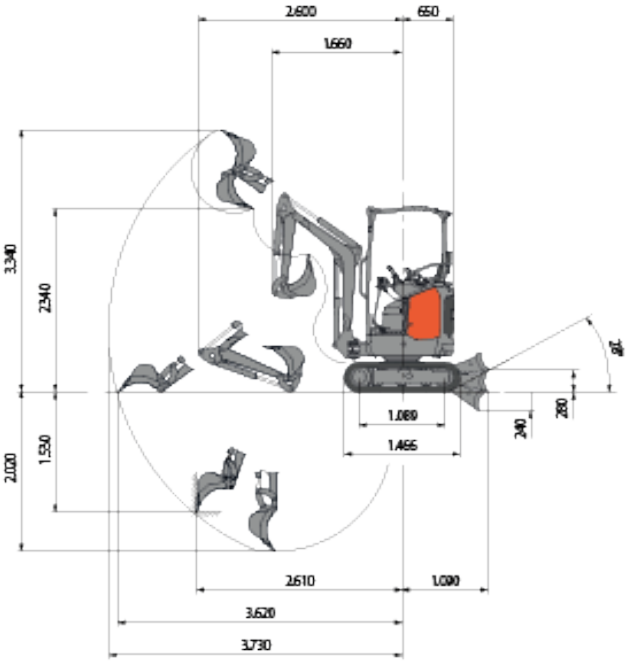

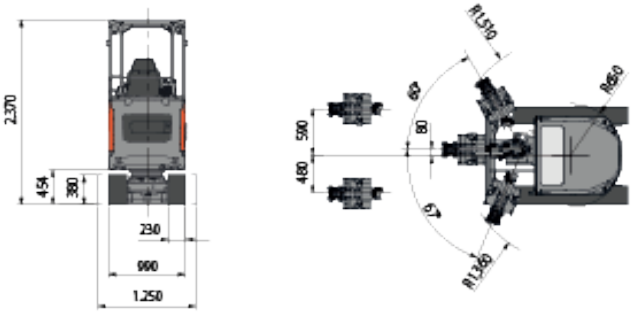

STANDARD & OPTIONAL
15ZT Plus

STANDARD

- YANMAR 854 cc 15.2 HP DIESEL engine - liquid cooled.
- Engine compliant with Stage 5 - Tier 4 Final.
- Hydraulic system open center.
- Hydraulic variable flow pump.
- Tilting cabin (ROPS - FOPS level 1) for maintenance with heating, ventilation, speakers, possibility to install radio and RHS and LHS rear view mirrors OR Tilting canopy (ROPS/TOPS - FOPS level 1) for maintenance.
- Servo assisted hydraulic joysticks.
- Hydraulic flow AUX 1 simple/double effect, max flow 29.1 lt/min and max pressure 205 bar (ex. hammer or auger).
- Hydraulic track widening (990 mm - 1,250 mm).
- Dual travel-speed with "AUTO TWO SPEED".
- Digging arm 950 mm.
- Dozer blade.
- LED working light on arm.
- Operating weight 1,690 kg.
- Minimum width 990 mm / maximum 1,250 mm.
- Digging depth 2,020 mm.
- Maximum height 2,370 mm.
- Breaking force at bucket tooth 1.500 daN.

OPTIONAL

- Preparation for moving loads in accordance with norm EN 474-5, complete with: blocking valves on 1st arm and 2nd arm, overload warning horn, tables of capacities and lifting hook on connecting rod.
- Electric anti-theft device on engine (12 V).
- Radio complete of BLUETOOTH connection with speakerphone, USB socket, SD/SDHC memory card reader, AUX In connection and DAB+ technology (only for cabin version).
- Movement warning horn.
- GEO-service analogue, tracking device for: Locating the machine on the WEB; Checking "real" working hours; Alarm in case of high water temperature or low engine oil pressur; Notification of alarms by SMS, WEB e-mail; 12 month contract.
- Front protection guard for canopy or cabin, certified FRONT-GUARD Level II.
- Front protection in plexiglass for canopy. Not compatible with front cabin protection guard.
- HARDOX wear plate on digging arm.
- Rear view mirrors on right and left sides of the canopy.
- Block valve on the dozer blade cylinder.
- Piloted block valve on cylinders on boom and dipperstick.
- Front plexiglass visor for cabin.
- GEO-service, contract extension of analogue satellite control system 12 months, 24 months, 36 months, 48 months, 60 months.
- LED magnetic beacon light (activation via switch on roll-bar version, only if optional LED bars are installed).
- Extra LED bars on cabin (n°2 in the front and n°2 in the rear) for machine without/equipped with front plexiglass visor (not compatible with front cabin protection guard).
- Extra LED bars on canopy (n°2 in the front and n°1 in the rear) complete with switch and socket on the roof for beacon light.
- PANOLIN biodegradable and ecological lubricants in place of standard version (hydraulic oil, engine oil and lubricating grease. Add for difference).
- PANOLIN HLP SYNTH 46 biodegradable and ecological hydraulic oil in place of standard version (add for difference).
- Colour personalisation with RAL in alternative to Eurocomach orange (the grey colour components cannot be personalised).
- AUX 2 auxiliary hydraulic system with pedal control (max flow 14 lt/min, maximum pressure 210 bar, it works in alternation with boom swing, select using electric switch on left panel).
- Direct drainage to oil tank.
- Hydraulic set-up for grapple rotor with cocks on bucket cylinder.
- Guarantee extension up to 3 years or 2000 hours.

SPECSHEET
18ZT

Transport weight with canopy
(without bucket and operator) (kg) _____ 1,720
Transport weight with cabin
(without bucket and operator) (kg) _____ 1,830
Operating weight ISO 6016 with canopy
(with bucket 35 kg and operator 75 kg) _____ 1,830
Operating weight ISO 6016 with cabin
(with bucket 35 kg and operator 75 kg) _____ 1,940
Travelling speed
(AUTO TWO SPEED (km/h) __ 1a : 0 ÷ 2.2 / 2a : 0 ÷ 4.1
Slew speed (rpm) _____ 10.5

ENGINE

Type _____ YANMAR 3TNV70 - STAGE 5
Max. Power (2.200 rpm) (kW - HP) _____ 12.0 - 15.4
Displacement (cc) _____ 854
Number of cylinders n° _____ 3
Cooling _____ Liquid
Consumption (lt/h) _____ 2.4
Alternator (V (A)) _____ 12 (40)
Battery (V (Ah)) _____ 12 (65)

HYDRAULIC SYSTEM

Pump type n° _____ variable flow
Pump displacement (cc) _____ 8 + 8 + 6.6
Pump capacity (lt/min) _____ 16 + 16 + 13.1
Max. circuit calibration pressure (bar) _____ 220
Auxiliary system (max pressure):
AUX 1 single or double effect (lt/min (bar)) __ 29.1 (205)

PERFORMANCES

Max. digging depth with
standard arm (optional arm) _____ 2,280 (2,480)
Max, dumping height with
standard arm (optional arm) _____ 2,580 (2,700)
Bucket breaking force
ISO 6015 (daN) _____ 1,500
Arm breaking force
(standard arm) ISO 6015 (daN) _____ 950
Traction force (daN) _____ 1,700
Specific ground pressure (kg/cm²) _____ 0.31
Max. slope _____ 60% - 30°

DIMENSIONS

Maximum width (mm) _____ 990 - 1,300
Total height (mm) _____ 2,370
Rear rotation radius (mm) _____ 650
igging arm length standard
(optional) (mm) _____ 1,150 (1,350)
Tracks width (mm) _____ 230
Rollers number (for each side)n° _____ 3

FILLINGS

Fuel tank (lt) _____ 25
Hydraulic oil tank (lt) _____ 20
Hydraulic circuit capacity (lt) _____ 29
Cooling system capacity (lt) _____ 4.5
Engine oil (lt) _____ 2.4

CONTROLS

Boom, dipper stick,
bucket and turret swing _____ 2 pilot joysticks
Track movements
(included counter rotation) _____ 2 mechanical levers
Dozer blade _____ pilot lever
Auxiliary system AUX 1
(single or double effect) _____ left pedal
Boom swing _____ right pedal

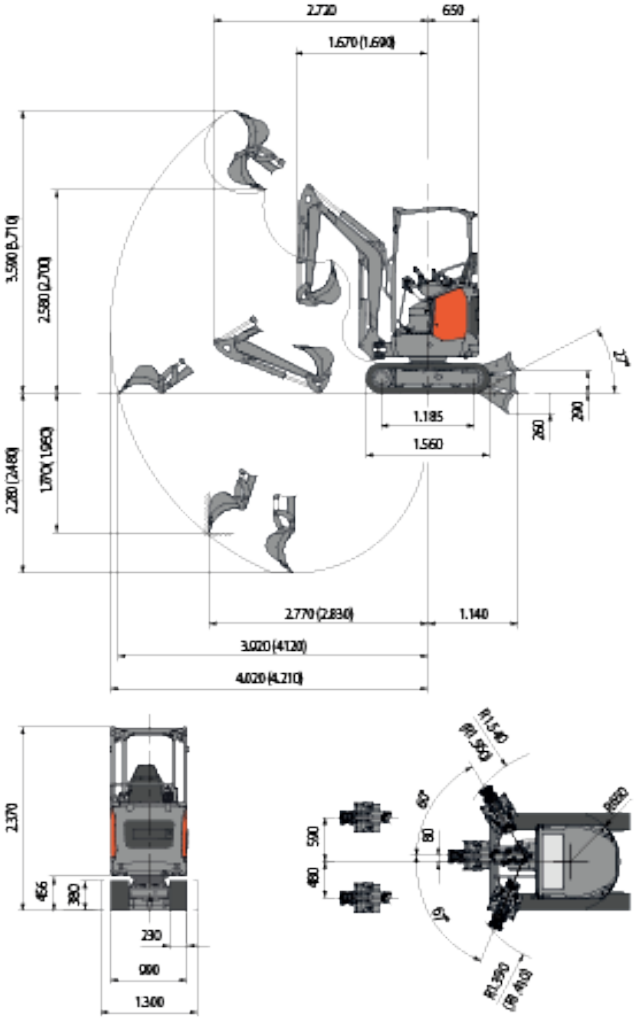

STANDARD & OPTIONAL
18ZT

STANDARD

- YANMAR 854 cc 15.2 HP DIESEL engine - liquid cooled.
- Engine compliant with Stage 5 - Tier 4 Final.
- Hydraulic system open center.
- Hydraulic variable flow pump.
- Tilting cabin (ROPS - FOPS level 1) for maintenance with heating, ventilation, speakers, possibility to install radio and RHS and LHS rear view mirrors.
- Servo assisted hydraulic joysticks.
- Hydraulic flow AUX 1 simple/double effect, max flow 29.1 lt/min and max pressure 205 bar (ex. hammer or auger).
- Hydraulic track widening (990 mm - 1,300 mm).
- Dual travel-speed with "AUTO TWO SPEED".
- Digging arm 1,150 mm.
- Dozer blade.
- LED working light on arm.
- Operating weight 1,830 kg.
- Minimum width 990 mm / maximum 1,300 mm.
- Digging depth 2,280 mm.
- Maximum height 2,370 mm.
- Breaking force at bucket tooth 1,500 daN.

OPTIONAL

- Preparation for moving loads in accordance with norm EN 474-5, complete with: blocking valves on 1st arm and 2nd arm, overload warning horn, tables of capacities and lifting hook on connecting rod.
- Electric anti-theft device on engine (12 V).
- Radio complete of BLUETOOTH connection with speakerphone, USB socket, SD/SDHC memory card reader, AUX In connection and DAB+ technology (only for cabin version).
- Movement warning horn.
- Extra LED bars on cabin (n°2 in the front and n°2 in the rear) for machine equipped with front plexiglass visor (not compatible with front cabin protection guard).
- Extra LED bars on canopy (n°2 in the front and n°1 in the rear) complete with switch and socket on the roof for beacon light.
- Long excavator boom (200 mm longer than standard, add for difference).
- GEO-service analogue, tracking device for: Locating the machine on the WEB; Checking "real" working hours; Alarm in case of high water temperature or low engine oil pressur; Notification of alarms by SMS, WEB e-mail; 12 month contract.
- GEO-service, contract extension of analogue satellite control system 12 months, 24 months, 36 months, 48 months, 60 months.
- Front protection guard for canopy or cabin, certified FRONT-GUARD Level II.
- LED magnetic beacon light (activation via switch on roll-bar version, only if optional LED bars are installed).
- PANOLIN biodegradable and ecological lubricants in place of standard version (hydraulic oil, engine oil and lubricating grease. Add for difference).
- PANOLIN HLP SYNTH 46 biodegradable and ecological hydraulic oil in place of standard version (add for difference).
- Colour personalisation with RAL in alternative to Eurocomach orange (the grey colour components cannot be personalised).
- HARDOX wear plate on the digging arm – OPTIONAL DIGGING ARM and STANDARD DIGGING ARM
- Front protection in plexiglass for canopy. Not compatible with front cabin protection guard.
- Fabric seat (available only with the cab specification).
- Rear-view mirrors on the right and left sides of the roll bar.
- HARDOX wear plate on excavator arm - STANDARD EXCAVATOR ARM.
- Lock valve on backfill blade cylinder.
- Pilot-operated lock valves on 1st and 2nd arm cylinders.
- 130 kg external ballast bolted to the standard ballast, 105 mm projection.
- Additional external counterweight 80 kg bolted to the standard one, projection 65 mm.AUX 2 auxiliary hydraulic system with pedal control (max flow 14 lt/min, maximum pressure 210 bar, it works in alternation with boom swing, select using electric switch on left panel).
- STANDARD AND OPTIONAL EXCAVATOR BOOM.
- Direct drain line to oil tank - STANDARD AND OPTIONAL EXCAVATOR BOOM.
- Hydraulic set-up for grapple rotor with valves on bucket cylinder.
- Extended warranty up to 3 years or 2000 hours.

SPECSHEET
19ZT

Transport weight with canopy
(without bucket and operator) _____ 1,770
Transport weight with cabin
(without bucket and operator) (kg) _____ 1,880
Operating weight ISO 6016 with canopy
(with bucket 35 kg and operator 75 kg) _____ 1,880
Operating weight ISO 6016 with cabin
(with bucket 35 kg and operator 75 kg _____ 1,990
Travelling speed
(AUTO TWO SPEED (km/h) ___1a : 0 ÷ 2,3/ 2a : 0 ÷ 4,4
Slew speed (rpm) _____ 10,5

ENGINE

Type _____ YANMAR 3TNV76 - STAGE 5
Max, Power (2,200 rpm) (kW - HP) _____ 13,7 - 18,6
Displacement (cc) _____ 1,116
Number of cylinders n° _____ 3
Cooling _____ Liquido
Consumption (lt/h) _____ 3.1
Alternator (V (A)) _____ 12 (40)
Battery (V (Ah)) _____ 12 (65)

HYDRAULIC SYSTEM

Pump type n° _____ portata variabile
Pump displacement (cc) _____ 9 + 9 + 6.6
Pump capacity (lt/min) _____ 18 + 18 - 13.1
Max. circuit calibration pressure (bar) _____ 240
Auxiliary system (max pressure):
AUX 1 single or double effect (lt/min (bar)) __31.1 (205)

PERFORMANCES

Max. digging depth with
standard arm (optional arm) _____ 2,280 (2,480)
Max, dumping height with
standard arm (optional arm _____ 2,580 (2,700)
Bucket breaking force
ISO 6015 (daN) _____ 1,500
Arm breaking force
(standard arm) ISO 6015 (daN) _____ 950
Traction force (daN) _____ 1,860
Specific ground pressure (kg/cm²) _____ 0.32
Max. slope _____ 60% - 30°

DIMENSIONS

Maximum width (mm) _____ 990 - 1,300
Total height (mm) _____ 2,370
Rear rotation radius (mm) _____ 650
igging arm length standard
(optional) (mm) _____ 1,150 (1,350)
Tracks width (mm) _____ 230
Rollers number (for each side)n° _____ 3

FILLINGS

Fuel tank (lt) _____ 25
Hydraulic oil tank (lt) _____ 20
Hydraulic circuit capacity (lt) _____ 29
Cooling system capacity (lt) _____ 4.5
Engine oil (lt) _____ 2.8

CONTROLS

Boom, dipper stick,
bucket and turret swin _____ 2 pilot joysticks
Track movements
(included counter rotation) _____ 2 pilot levers
Dozer blade _____ pilot lever
Auxiliary system AUX 1 (single or double effect
_____ electroproportional roller on right joystick
Boom swing _____ electroproportional roller on left joystick

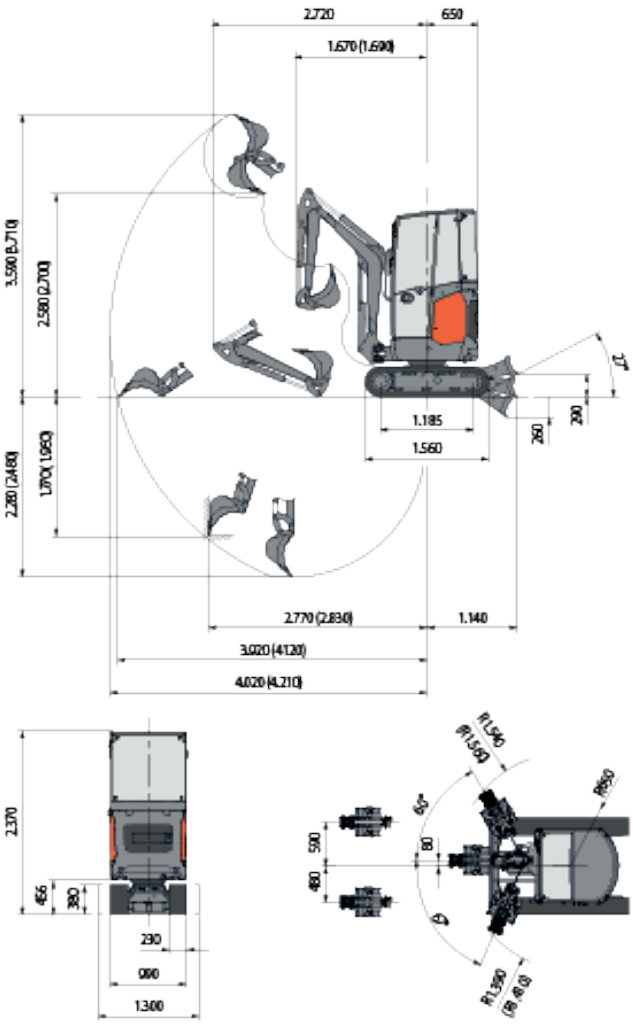

STANDARD & OPTIONAL
19ZT

STANDARD

- YANMAR 1,116 cc 18.4 HP DIESEL engine - liquid cooled.
- Engine compliant with Stage 5 - Tier 4 Final.
- Hydraulic system open center.
- Hydraulic variable flow pump.
- Tilting cabin (ROPS - FOPS level 1) for maintenance with heating, ventilation, speakers, possibility to install radio and RHS and LHS rear view mirrors.
- Servo assisted hydraulic joysticks with electro-hydraulic proportional controls for: – boom swing; – hydraulic flow AUX 1 simple/double effect, max flow 31.1 lt/min with electrical latching and max pressure 205 bar (ex. hammer or auger).
- Hydraulic track widening (990 mm - 1,300 mm).
- Dual travel-speed with "AUTO TWO SPEED".
- Digging arm 1,150 mm.
- Dozer blade.
- LED working light on arm.
- Operating weight 1,880 kg.
- Minimum width 990 mm / maximum 1,300 mm.
- Digging depth 2,280 mm.
- Maximum height 2,370 mm.
- Breaking force at bucket tooth 1,500 daN.

OPTIONAL

- Preparation for moving loads in accordance with norm EN 474-5, complete with: blocking valves on 1st arm and 2nd arm, overload warning horn, tables of capacities and lifting hook on connecting rod.
- Electric anti-theft device on engine (12 V).
- Radio complete of BLUETOOTH connection with speakerphone, USB socket, SD/SDHC memory card reader, AUX In connection and DAB+ technology (only for cabin version).
- Movement warning horn.
- Extra LED bars on cabin (n°2 in the front and n°2 in the rear) for machine equipped with front plexiglass visor (not compatible with front cabin protection guard).
- Extra LED bars on canopy (n°2 in the front and n°1 in the rear) complete with switch and socket on the roof for beacon light.
- Long excavator boom (200 mm longer than standard, add for difference).
- GEO-service analogue, tracking device for: Locating the machine on the WEB; Checking "real" working hours; Alarm in case of high water temperature or low engine oil pressur; Notification of alarms by SMS, WEB e-mail; 12 month contract.
- GEO-service, contract extension of analogue satellite control system 12 months, 24 months, 36 months, 48 months, 60 months.
- Machine control unit programming kit that allows you to connect the machine to the PC (not supplied). Allows you to carry out diagnostics, modify the functional parameters of the machine (not adjustable from the display), update the machine software, etc. The kit includes:- Connection wiring- PC software (only available for Windows operating system)- Instructions for use in electronic format.
- LED magnetic beacon light (activation via switch on roll-bar version, only if optional LED bars are installed).
- PANOLIN biodegradable and ecological lubricants in place of standard version (hydraulic oil, engine oil and lubricating grease. Add for difference).
- PANOLIN HLP SYNTH 46 biodegradable and ecological hydraulic oil in place of standard version (add for difference).
- Colour personalisation with RAL in alternative to Eurocomach orange (the grey colour components cannot be personalised)
- HARDOX wear plate on the digging arm – OPTIONAL DIGGING ARM and STANDARD DIGGING ARM
- Front protection in plexiglass for canopy. Not compatible with front cabin protection guard.
- Fabric seat (available only with the cab specification).
- Rear-view mirrors on the right and left sides of the roll bar.
- Lock valve on backfill blade cylinder.
- Pilot-operated lock valves on 1st and 2nd arm cylinders.
- Supplementary 130 kg external ballast screwed onto standard ballast, protrusion 105 mm.
- Supplementary 80 kg external ballast screwed onto standard ballast, protrusion 65 mm.
- Hydraulic set-up for mulcher with supplementary pump (flow rate max 18.2 lt/min, pressure max 180 bar), complete with: direct drain to oil tank and external supplementary ballast 80 kg screwed to the standard one (protrusion 65 mm). - CANOPY - STANDARD DIGGING ARM.
- AUX 2 auxiliary hydraulic system with proportional electrohydraulic control on LH joystick (max flow 14 lt/min, maximum pressure 210 bar, it works in alternation with the boom swing, selection using switch on right joystick) - STANDARD DIGGING ARM.
- Direct drain line to oil tank - STANDARD AND OPTIONAL EXCAVATOR BOOM.
- Hydraulic set-up for grapple rotor with valves on bucket cylinder.
- Extended warranty up to 3 years or 2000 hours.

SPECSHEET
19TR

Transport weight with canopy
(without bucket and operator) _____ 1,900
Transport weight with cabin
(without bucket and operator) (kg) _____ 2,010
Operating weight ISO 6016 with canopy
(with bucket 35 kg and operator 75 kg) _____ 2,010
Operating weight ISO 6016 with cabin
(with bucket 35 kg and operator 75 kg) _____ 2,120
Travelling speed (km/h) _____ 1a : 0 ÷ 2.3/ 2a : 0 ÷ 4.4
Slew speed (rpm) _____ 10.5

ENGINE

Type _____ YANMAR 3TNV76 - STAGE 5
Max. Power (2,200 rpm) (kW - HP) _____ 13.7 - 18.6
Displacement (cc) _____ 1,116
Number of cylinders n° _____ 3
Cooling _____ Liquid
Consumption (lt/h) _____ 3.1
Alternator (V (A)) _____ 12 (40)
Battery (V (Ah)) _____ 12 (65)

HYDRAULIC SYSTEM

Pump type _____ variable flow
Pump displacement (cc) _____ 9 + 9 + 6.6
Pump capacity (lt/min) _____ 18 + 18 - 13.1
Max. circuit calibration pressure (bar) _____ 240
Auxiliary system (max pressure):
AUX 1 single or double effect (lt/min (bar)) __ 31.1 (205)

PERFORMANCES

Max. digging depth with
standard arm (optional arm) (mm) _____ 2.380 (2.580)
Max. dumping height with
standard arm (optional arm) (mm) _____ 3.370 (3.550)
Bucket breaking force
(standard arm) ISO 6015 (daN) _____ 1.500
rm breaking force
(standard arm) ISO 6015 (daN) _____ 950
Traction force (daN) _____ 1.860
Specific ground pressure (kg/cm²) _____ 0.34
Max. slope _____ 60% - 30°

DIMENSIONS

Maximum width (mm) _____ 990 - 1,300
Total height (mm) _____ 2,370
Rear rotation radius (mm) _____ 715
Digging arm length standard
(optional) (mm) _____ 1,150 (1,350)
Tracks width (mm) _____ 230
Rollers number (for each side) n° _____ 3

FILLINGS

Fuel tank (lt) _____ 25
Hydraulic oil tank (lt) _____ 20
Hydraulic circuit capacity (lt) _____ 30
Cooling system capacity (lt) _____ 4.5
Engine oil (lt) _____ 2.8

CONTROLS

Boom, dipper stick, bucket and turret swing 2 pilot joysticks
Positioner two pieces boom _____ electroproportional roller on right joystick
Track movements
(included counter rotation) _____ 2 pilot levers
Dozer blade _____ pilot lever
Auxiliary system AUX 1 (single or double effect)
_____ electroproportional roller on right joystick
Boom swing _____ electroproportional roller on left joystick

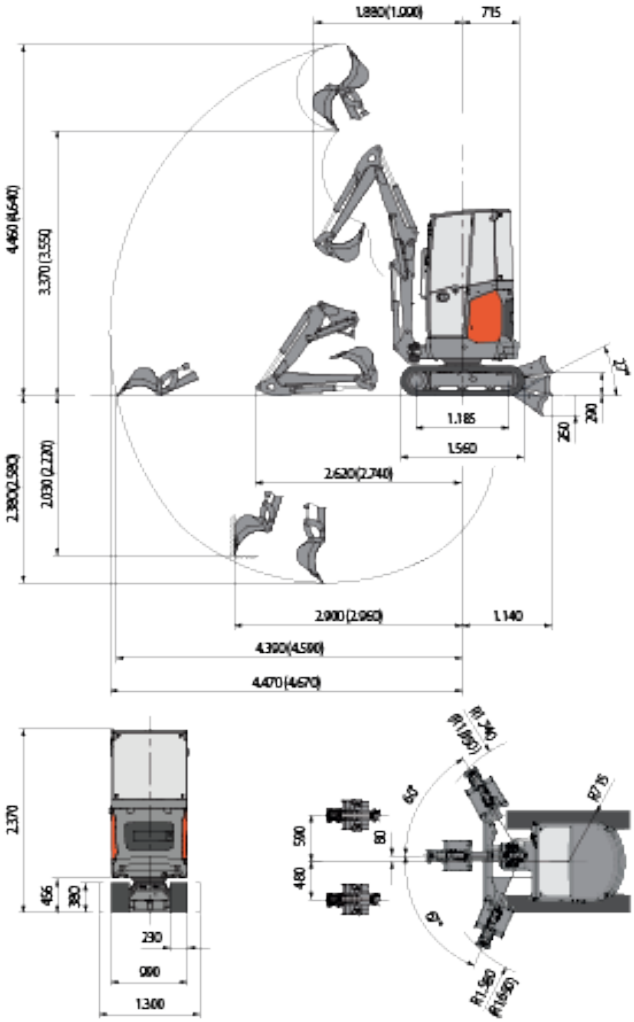

STANDARD & OPTIONAL
19TR

STANDARD

- YANMAR 1.116 cc 18.4 HP DIESEL engine - liquid cooled.
- Engine compliant with Stage 5 - Tier 4 Final.
- Hydraulic system open center.
- Hydraulic variable flow pump.
- Tilting cabin (ROPS - FOPS level 1) for maintenance with heating, ventilation, speakers, possibility to install radio and RHS and LHS rear view mirrors. OR Tilting canopy (ROPS/TOPS - FOPS level 1) for maintenance.
- Servo assisted hydraulic joysticks with electro-hydraulic proportional controls for: – boom swing; – two-piece boom; – hydraulic flow AUX 1 simple/double effect, max flow 31.1 lt/min with electrical latching and max pressure 205 bar (ex. hammer or auger).
- Hydraulic track widening (990 mm - 1,300 mm).
- Dual travel-speed with "AUTO TWO SPEED".
- Two piece boom complete with valves, positioner and dipper stick.
- Digging arm 1,150 mm.
- Supplementary 80kg external ballast.
- Dozer blade.
- LED working light on arm.
- Operating weight 2,010 kg.
- Minimum width 990 mm / maximum 1,300 mm.
- Digging depth 2,380 mm.
- Maximum height 2,370 mm.
- Breaking force at bucket tooth 1,500 daN.

OPTIONAL

- Preparation for moving loads in accordance with norm EN 474-5, complete with: blocking valves on 1st arm and 2nd arm, overload warning horn, tables of capacities and lifting hook on connecting rod.
- Electric anti-theft device on engine (12 V).
- Radio complete of BLUETOOTH connection with speakerphone, USB socket, SD/SDHC memory card reader, AUX In connection and DAB+ technology (only for cabin version).
- Movement warning horn.
- Extra LED bars on cabin (n°2 in the front and n°2 in the rear) for machine equipped with front plexiglass visor (not compatible with front cabin protection guard).
- Extra LED bars on canopy (n°2 in the front and n°1 in the rear) complete with switch and socket on the roof for beacon light.
- Long excavator boom (200 mm longer than standard, add for difference).
- GEO-service analogue, tracking device for: Locating the machine on the WEB; Checking "real" working hours; Alarm in case of high water temperature or low engine oil pressur; Notification of alarms by SMS, WEB e-mail; 12 month contract.
- GEO-service, contract extension of analogue satellite control system 12 months, 24 months, 36 months, 48 months, 60 months.
- Front protection guard for canopy or cabin, certified FRONT-GUARD Level I.
- Machine control unit programming kit that allows you to connect the machine to the PC (not supplied). Allows you to carry out diagnostics, modify the functional parameters of the machine (not adjustable from the display), update the machine software, etc. The kit includes:- Connection wiring- PC software (only available for Windows operating system)- Instructions for use in electronic format roll-bar version, only if optional LED bars are installed).
- PANOLIN biodegradable and ecological lubricants in place of standard version (hydraulic oil, engine oil and lubricating grease. Add for difference).
- PANOLIN HLP SYNTH 46 biodegradable and ecological hydraulic oil in place of standard version (add for difference).
- Personalizzazione colore con RAL in alternativa Colour personalisation with RAL in alternative to Eurocomach orange (the grey colour components cannot be personalised)
- HARDOX wear plate on the digging arm – OPTIONAL DIGGING ARM and STANDARD DIGGING ARM
- Front protection in plexiglass for canopy. Not compatible with front cabin protection guard.
- Fabric seat (available only with the cab specification).
- Rear-view mirrors on the right and left sides of the roll bar.
- Lock valve on backfill blade cylinder.
- Pilot-operated lock valves on 1st and 2nd arm cylinders.
- Supplementary 130 kg external ballast screwed onto standard ballast, protrusion 105 mm.
- Supplementary 80 kg external ballast screwed onto standard ballast, protrusion 65 mm.
- Hydraulic set-up for mulcher with supplementary pump (flow rate max 18,2 lt/min, pressure max 180 bar), complete with: direct drain to oil tank and external supplementary ballast 80 kg screwed to the standard one (protrusion 65 mm). - CANOPY - STANDARD DIGGING ARM.
- AUX 2 auxiliary hydraulic system with proportional electrohydraulic control on LH joystick (max flow 14 lt/min, maximum pressure 210 bar, it works in alternation with the boom swing, selection using switch on right joystick) - STANDARD DIGGING ARM.
- Direct drain line to oil tank - STANDARD AND OPTIONAL EXCAVATOR BOOM.
- Hydraulic set-up for grapple rotor with valves on bucket cylinder.
- Extended warranty up to 3 years or 2000 hours.

EUROCOMACH

Concrete solutions. Always.

Sampierana S.p.A.

Via Leonardo da Vinci, 40 47021
S. Piero in Bagno (FC) - ITALY
+39 0543.904211

www.eurocomach.com

COMPANY WITH QUALITY
SYSTEM CERTIFIED BY DNV GL

The information contained in this brochure is of a general nature. Sampierana S.p.A. reserves the right to amend technical data and product specifications at any time, without prior notice. The photographs are for illustrative purposes only and do not necessarily refer to products in standard condition. For instructions on the correct use of the products, please refer to the user and maintenance manual. Failure to comply with the instructions contained in the user and maintenance manual shall not give rise to any liability on the part of Sampierana S.p.A. for damage to persons and/or property.

Translated with DeepL.com (free version)