60ZT

Concrete solutions. Always.

Engine V2607-CR-T

Engine power 45,0 kW - 61,2 HP

Operating weight 5.700 kg

EUROCOMACH®

60ZT

Operating weight (with rubber tracks)	kg	5.700
Travelling speed (AUTO TWO SPEED)	km/h	1a: 0 ÷ 2,6 / 2a: 0 ÷ 5,2
Slew speed	rpm	11
ENGINE		
Type	KUBOTA V2607-CR-T - STAGE 5	
Max Power (2.200 rpm)	kW - HP	45,0 - 61,2
Displacement	cc	2.615
Number of cylinders	n°	4
Cooling	water	
Consumption	lt/h	7,6
Alternator	V (A)	12 (60)
Battery	V (Ah)	12 (95)
HYDRAULIC SYSTEM		
Circuit Type	load sensing closed center system with flow sharing control valve	
Pump type	1 ls variable pump + 1 gear pump	
Pump displacement	cc	65 + 14,5
Pump capacity	lt/min	129 + 28,8
Max. circuit calibration pressure	bar	280
Auxiliary Flow (max pressure): AUX 1 main high flow simple or double effect AUX 2 double effect AUX 3 double effect	lt/min (bar)	 80/80 (200) 60/40 (280) 37/37 (280)
PERFORMANCES		
Max digging depth standard arm (optional arm)	mm	3.850 (4.100)
Max dumping height with cab standard arm (optional arm)	mm	4.090 (4.240)
Bucket breaking force (standard arm) ISO 6015	daN	5.000
Arm breaking force (standard arm) ISO 6015	daN	3.000
Traction force	daN	5.200
Ground bearing pressure with rubber tracks	kg/cm²	0,31
Max slope	60% - 30°	
DIMENSIONS		
Maximum width	mm	1.980
Total height	mm	2.550
Rear rotation radius	mm	1.000
Digging arm length std (optional)	mm	1.650 (1.900)
Tracks width	mm	400
Rollers number (for each side)	n°	5/1
FILLINGS		
Fuel tank	lt	85
Hydraulic oil tank	lt	60
Hydraulic circuit capacity	lt	80
Cooling system capacity	lt	12
Engine oil	lt	10,2
CONTROLS		
Boom, dipper stick, bucket and turret swing	2 pilot joysticks	
Tracks mouvement (included counter rotation)	2 pilot levers	
Dozer blade	pilot lever	
Auxiliary circuit (simple or double effect)	electroproportional switch on right joystick	
Boom swing	electroproportional switch on left joystick	

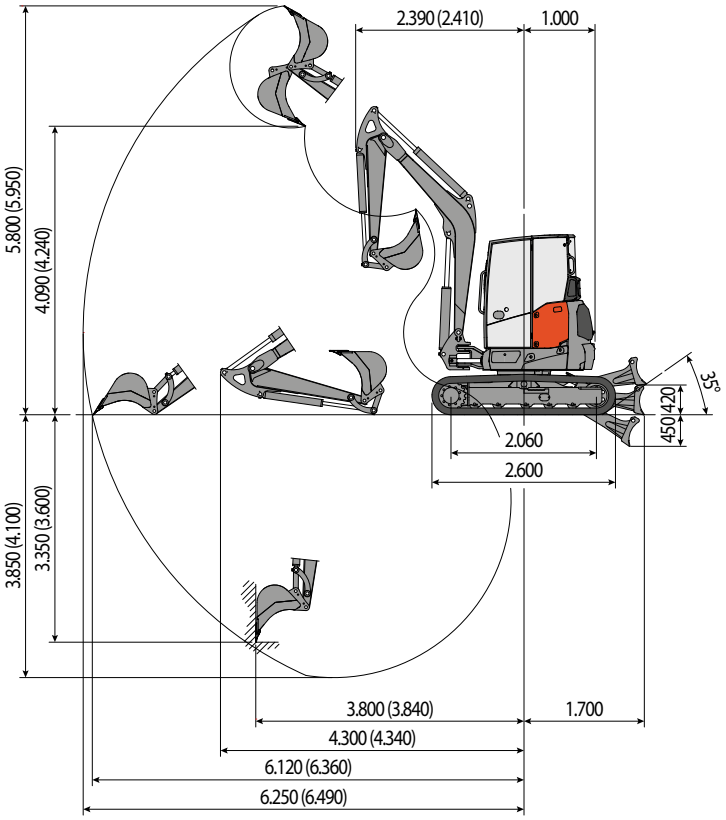

Standard dipper stick L=1.650
(Optional dipper stick L=1.900)

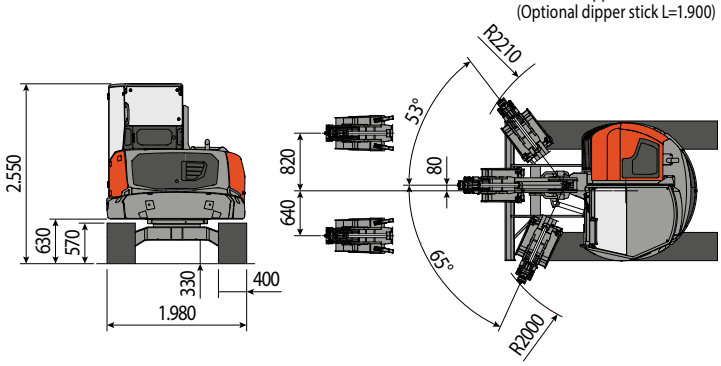

LIFTING CAPACITY
Opening arm from the rotation's center (m)Lifting capacity (kg) at 1.0 m height

	3	4	5	MAX
Frontal and lowered dozer blade	2514	1662	1327	1248
Frontal and lifted dozer blade	1793	1125	814	705
Lateral	1388	900	640	555

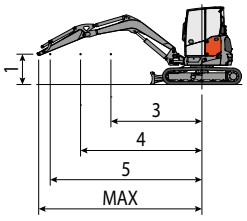

The lifting capacity is based on the ISO 10567 and it does not exceed more than the 75% of static tipping load or more than the 87% of the hydraulic lifting capacity of the machine.

EUROCOMACH®

Sampierana S.p.A. reserves the right to change technical data and product characteristics at any time without prior notice.